AVS Uriel systems Inc.
VA office
13882 Park Center Rd Herndon, VA 20171
Toll:1-(800) 691-1034 Phone: (571) 490-8321
Fax: (571) 490-8328

HD-SDI VANDAL-PROOF & WATERPROOF D&N DOME CAMERA SNAP212VIR MANUAL

◐ PRECAUTION

1. You can install the camera indoors or outdoors.
2. Choose an ideal location for the camera, since a camera unit must be protected against vibration.
3. Be careful not to scratch the camera unit, especially lens or dome cover.
4. Use the camera within the temperature(-45℃~50℃). [W/HEATER(option)]
5. Avoid any direct sun light toward the lens.
6. Use the AC adaptor 12V DC, 600mA regulated. Dual voltage product can use 24V AC, 600mA adaptor.(option)

If the product is to be put out of operation definitively, take it to a local recycling plant for a disposal which is not harmful to the environment.

◐ FEATURES

1. 1/2.9" SONY CMOS sensor
2. Full HD Resolution
3. DAY & NIGHT Function
4. WDR (Wide Dynamic Range)
5. 3D DNR Function
6. Privacy mask function 16 area
7. On Screen Display menu
8. Intelligent motion detection 4 area
9. Output : HD-SDI/CVBS
10. Protocol RS-485 : PELCO-P, PELCO -D (Option)
11. IP68(Waterproof)
12. Durable MATERIAL : Body - Aluminum, Dome - Polycarbonate
13. This camera is incredibly flexible to install with its 3-axis camera construction, which makes the camera ceiling, wall or slope mountable
14. 25M range visible in total darkness with 24pcs of IR LEDs.(Indoor)

◐ HOW TO INSTALL

1. Camera installation
   (1) Fix the camera set with the supplied screws on ceiling or wall mount. If you don't use supplied screws, the camera may fall off.
   (2) Please refer to '3. Camera angle adjustment' regarding adjust camera angle.
   (3) Lens adjustment(Vari-focal Lens only)
   After opening the LED cover,
   ① By turning the "Tele-Wide" knob, you can access a range of focal lengths within specified limits.
   ② Since then, by turning the "Near-Far" knob, you can set the focus toward the wanted object.
   (4) Re-assemble the camera.

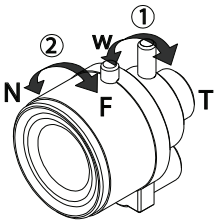

〈Ceiling mount〉

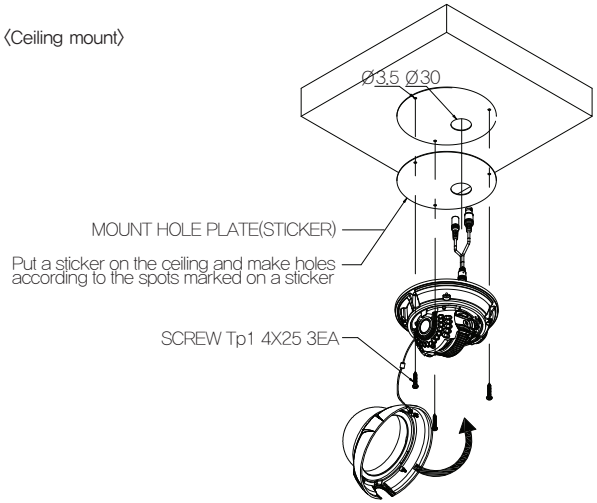

〈Wall mount〉

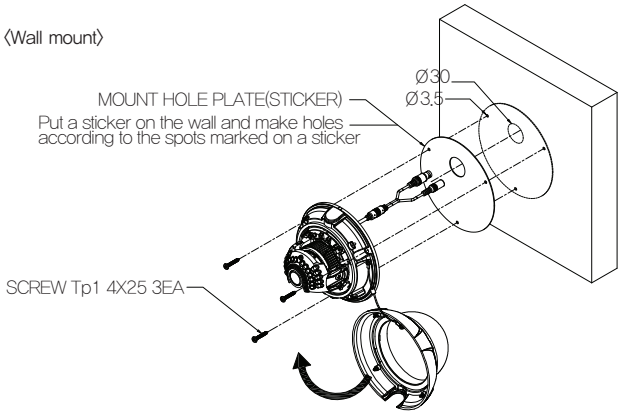

2. Pipe application
   (1) Remove the screw for fixing a cable on the bottom of the base.
   (2) Open the DOME COVER.
   (3) Remove the TAP COVER and place the cables there.
   (4) After distributing cables, use the TEPLON tape to wipe the pipe.
   (5) Combine the pipe to the base.
   〈Caution〉 If you don't wipe TEFLON tape on pipe, it might cause troubles on water-resistant.

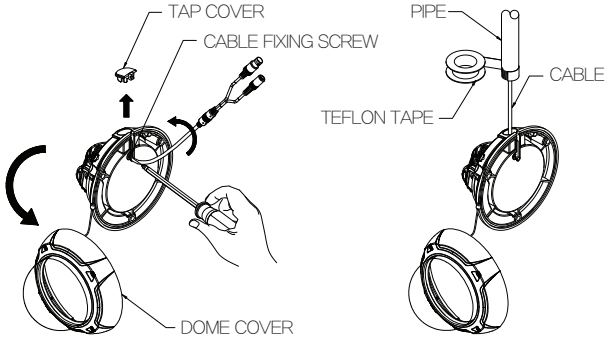

3. Camera angle adjustment :
   (1) Pan adjustment : Grasp the disk of camera and then adjust direction to the right or left(-160°~190°)
   (2) Tilt adjustment : Grasp the camera holder and then adjust direction to the up or down(6°~ 90°)
   (3) Roll adjustment : Grasp the camera holder and then rotate (-178°~178°)
   〈Caution〉 If you try to adjust the camera out of limited angle, it might cause troubles and damage to camera.

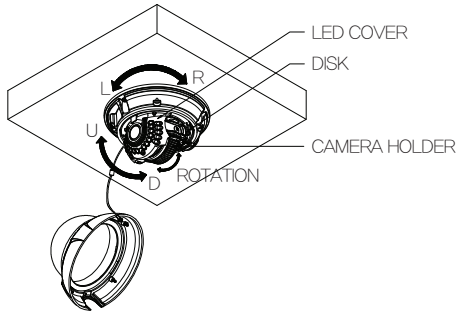

◐ DIMENSION

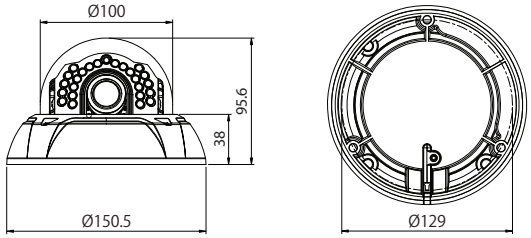

◐ CAMERA / STRUCTURE SPECIFICATION

SNAP212VIR	
VIDEO	
Image Sensor	1/2.9" SONY CMOS
Total Pixels	2010(H) 1108(V) = 2,227,080 (pixel)
Active Pixels	1944(H) 1092(V) = 2,122,848 (pixel)
Scanning System	Progressive Scan
Resolution	Digital : 1920X1080p (1080p, 30/25fps)
S/N	More than 50dB (AGC OFF)
Video Output	HD-SDI Analog : NTSC, PAL(without WDR)
Min.Illumination	Color: 1.0Lux, BW: 0.5Lux Color DSS: 0.002Lux, BW DSS : 0.001Lux
LENS TYPE	
Lens Type	DC Auto Iris
Focal Length	f = 2.8(W) ~ 12.0(T)mm
OPERATIONAL	
On screen display	Yes
Day & Night	TDN (Auto / Day / Night)
Brightness	0 ~ 20 steps
Shutter Speed	Auto / Manual (1/30(1/25) ~ 1/60000)
Sens-up	OFF / ×2~×8
AGC	0~20 steps
Backlight	WDR / BLC / OFF
HLC	ON / OFF
D-WDR	ON / OFF
White Balance	Auto / Autoext / Manual
Sharpness	0~10 steps
Digital Noise Reduction (3D)	High/Middle/Low/Off
Digital Zoom	ON/OFF(X1~X64)
Motion Detection	ON / OFF
Privacy Masking	ON / OFF (16 Zone Selectable)
Mirror	H / V / H&V / OFF
Defog	ON / OFF

STRUCTURE SPECIFICATION	
MECHANICAL	
Dimension	Ø150.5 X 95.6(H) mm
Weight	Approx. 750g
ENVIRONMENTAL	
Ingress Protection	IP68
Operating Temp	-45℃ ~ 50℃
Humidity	0% to 90%
FUNCTION	
Protocol	PELCO-D , PELCO-P
Baud Rate	2400 ~ 57,600bps
Communication	RS-485
ELECTRONICAL	
Supplied Voltage	DC12V±10%orAC24V±10% DualVoltage
Current Consumption	Max.600mA(at12VDC,24VAC):LED ON
LED	IR LED 24 PCS
Heater	Yes
Fan	Option
CERTIFICATION	
CE, FCC, ROHS	Yes

◐ FUNCTION SETTING

1. How to use the jog lever

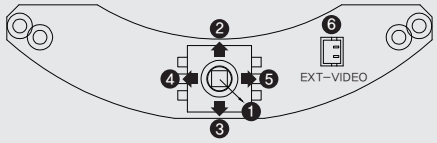

①SET : Used to access the menu and confirm selection.
②UP, ③DOWN : Used to move the cursor to up or down.
④LEFT, ⑤RIGHT : Used to move the cursor to left or right and change the value.
⑥EXT-VIDEO : Extra video output terminal for installation. Plug your test monitor in hear. The cable is option.

2. OSD menu structure

Function setting menu	Sub menu	Summary
1. EXPOSURE	BRIGHTNESS	Adjust brightness level 0(dark) ~ 20(bright)
	LENS-DC	Select when use of DC Auto-Iris lense/except the special cases, DC is standard Model
	AE MODE	Select AE MODE
	SHUTTER	Can be set in AUTO or MANUAL
	SENS-UP	Select maximum DSS(Digital Slow Shutter) OFF, x2~X8
	AGC	Select Auto Gain Control
2. WHITE BAL	AWB	Select WHITE BALANCE mode
	▷AUTO	Automatically adjusts color according to the lighting
	▷AUTO ext	Faster extension version of Auto
	MANUAL	Adjust the white balance manually
3. BACK LIGHT	BACKLIGH	Select Backlight compenstaion mode
	WDR	Adjust WDR level - Low / Middle / High
	HLC	Select High Light Compensation.
	BLC	
	▷AREA	Control BLC area according to light condition.
	▷POS-X	Adjust the window X- Axis position
	▷POS-Y	Adjust the window Y- Axis position
	▷SIZ-X	Adjust the window X- Axis size
	▷SIZ-Y	Adjust the window Y- Axis size
4. DAY& NIGHT	DAY&NIGHT	Select Day&Night mode
	AUTO-CDS	Automatic switching between day operation (colormode) and night operation (black and white mode)
	▷IR-LED	LED On/Off Control
	▷ANTI-SAT	Compensate when IR hunting happens. When you use this function.
	▷AGC THRS	Day&Night change level. Higher level make the night mode changed in lower illumination.
	▷AGC MARGIN	Day to night and night to day switch margin
	▷DELAY	2 ~ 60 second
5. IMAGE	DNR	Select Digital Noise Reduction
	SHARPNESS	Adjust sharpness level
	COLOR GAIN	Adjust Color gain value 0~20 Steps.
	GAMMA	Selecte gamma mode. 0.45~0.65
	D-WDR	Select Digital WDR(Wide Dynamic Range)
	DEFOG	Carry out defog function.
	SHADING	Select Lens shading compensation. (OFF / ON)
	MIRROR	H-Flip : Flip the picture horizontally on the screen V-Flip: Flip the picture vertically on the screen Rotate : Flip the picture horizontally & vertically on the screen
6. SPECIAL	TITLE	Camera title edit and display on / off select
	PRIVACY	Hide an area you want to hide on the screen
	MOTION	When there is movement of the subject on the screen,there will be motion detection
	D-ZOOM	Select digital zoom magnification. Max 8x

Function setting menu	Sub menu	Summary
6. SPECIAL	LANGUAGE	Select Language
	COMM.	Setup Camera ID and baud-rate. (Pelco-D/P Auto detect)
7. SYSTEM	IMAGE RANGE	Select pedestal level scale
	HD Format	Select HD output format. 1080p or 720p
	HD FPS	Select HD output frame rate. 1080p 30, 25 / 720p 60, 50
	CVBS	Select CVBS output mode. NTSC or PAL
8. RESET		All the settings will be restored to the factory default
9. EXIT		Escape the menu

3. How to control through RS-485 communication(option)

1) Match the camera with controller's ID, baudrate and protocol
2) Up, Down, Left and right of Jog lever is same as Up, Down, Left and right of RS-485 controller
3) Enter of Jog lever is the same as menu key or IRIS open key of RS-485 controller

4. Cable array(option)

NO	Function	Remark
A	RX +	RS-485A
B	RX -	RS-485B

Uriel Systems, Inc

AVS Uriel systems Inc.
VA office
13882 Park Center Rd Herndon, VA 20171
Toll:1-(800) 691-1034 Phone: (571) 490-8321
Fax: (571) 490-8328